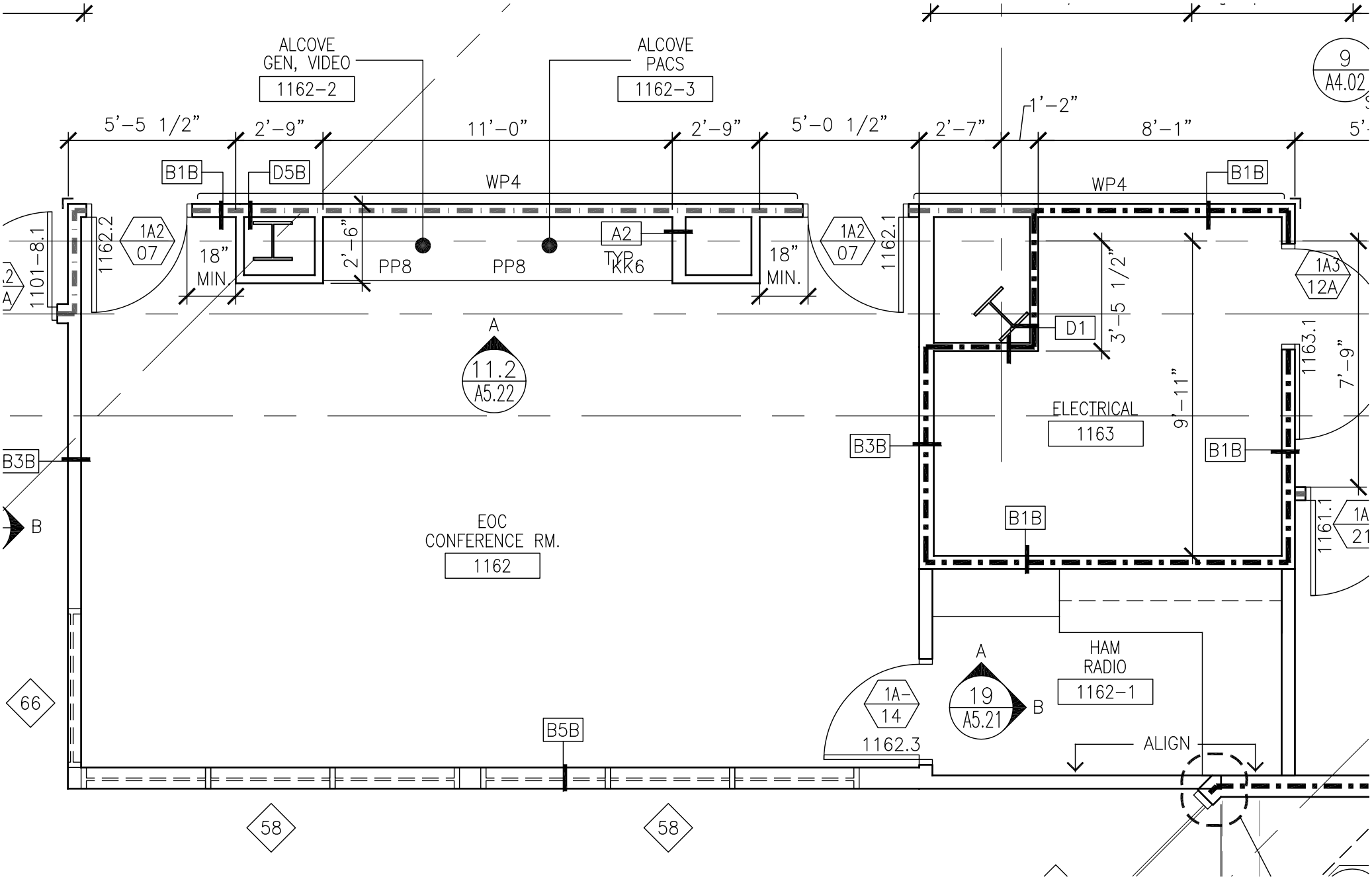
ALCOVE
GEN, VIDEO
1162-2
ALCOVE
PACS
1162-3
9
A4.02
5'-5 1/2"
2'-9"
11'-0"
2'-9"
5'-0 1/2"
2'-7"
1'-2"
8'-1"
B1B
D5B
WP4
WP4
B1B
1A2
07
1162.2
1101-8.1
18"
MIN.
2'-6"
PP8
PP8
A2
TYP
KK6
18"
MIN.
1A2
07
1162.1
1A3
12A
3'-5 1/2"
D1
1163.1
7'-9"
A
11.2
A5.22
ELECTRICAL
1163
9'-11"
B3B
B1B
B3B
B1B
B
EOC
CONFERENCE RM.
1162
B1B
1161.1
1A
21
HAM
RADIO
1162-1
A
19
A5.21
B
1A-
14
1162.3
ALIGN
66
B5B
58
58

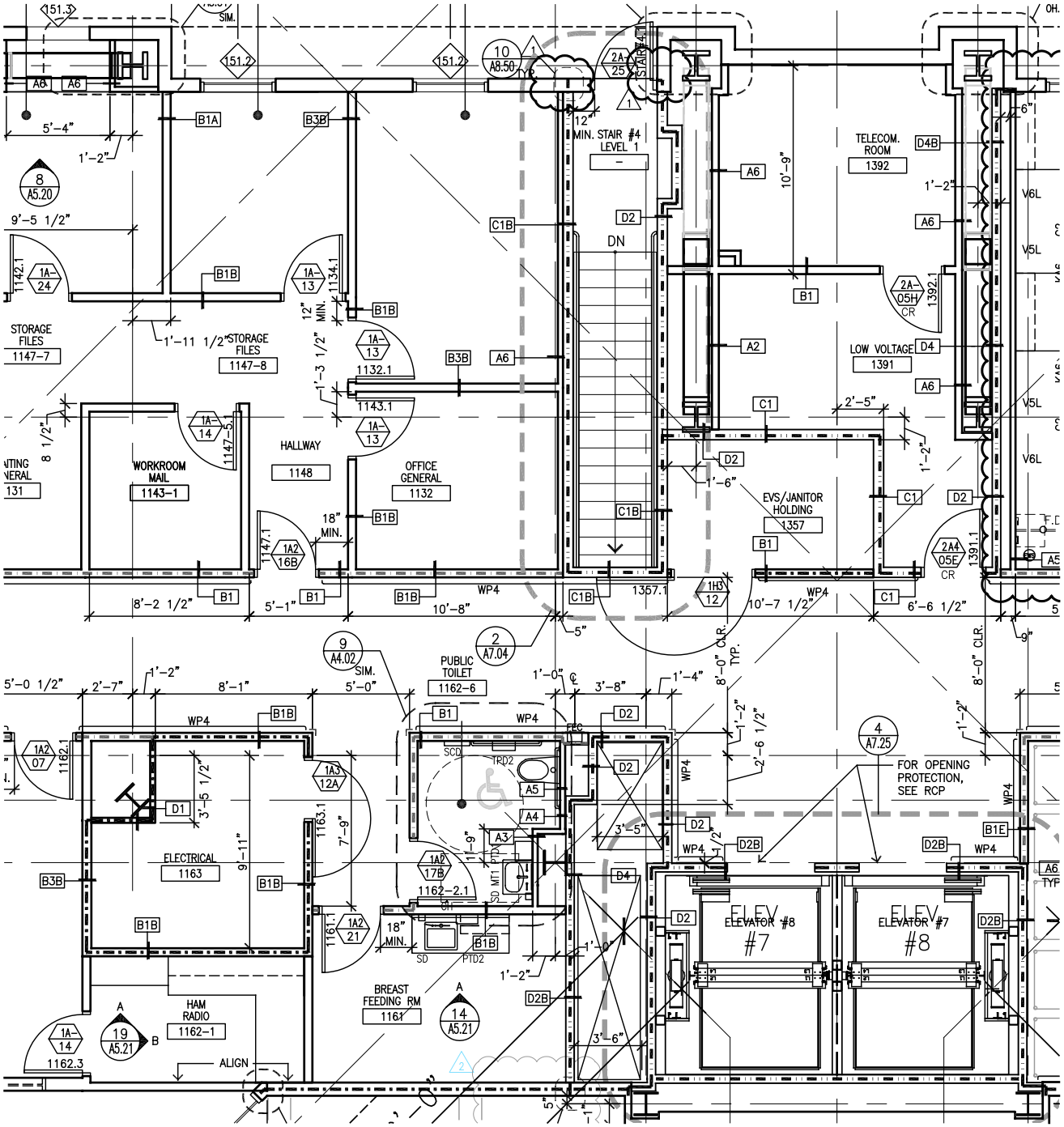
STORAGE FILES
1147-7
STORAGE FILES
1147-8
WORKROOM MAIL
1143-1
HALLWAY
1148
OFFICE GENERAL
1132
MIN. STAIR #4 LEVEL 1
TELECOM. ROOM
1392
LOW VOLTAGE
1391
EVS/JANITOR HOLDING
1357
PUBLIC TOILET
1162-6
ELECTRICAL
1163
HAM RADIO
1162-1
BREAST FEEDING RM
1161
ELEVATOR #8
ELEVATOR #7
FOR OPENING PROTECTION, SEE RCP
ALIGN

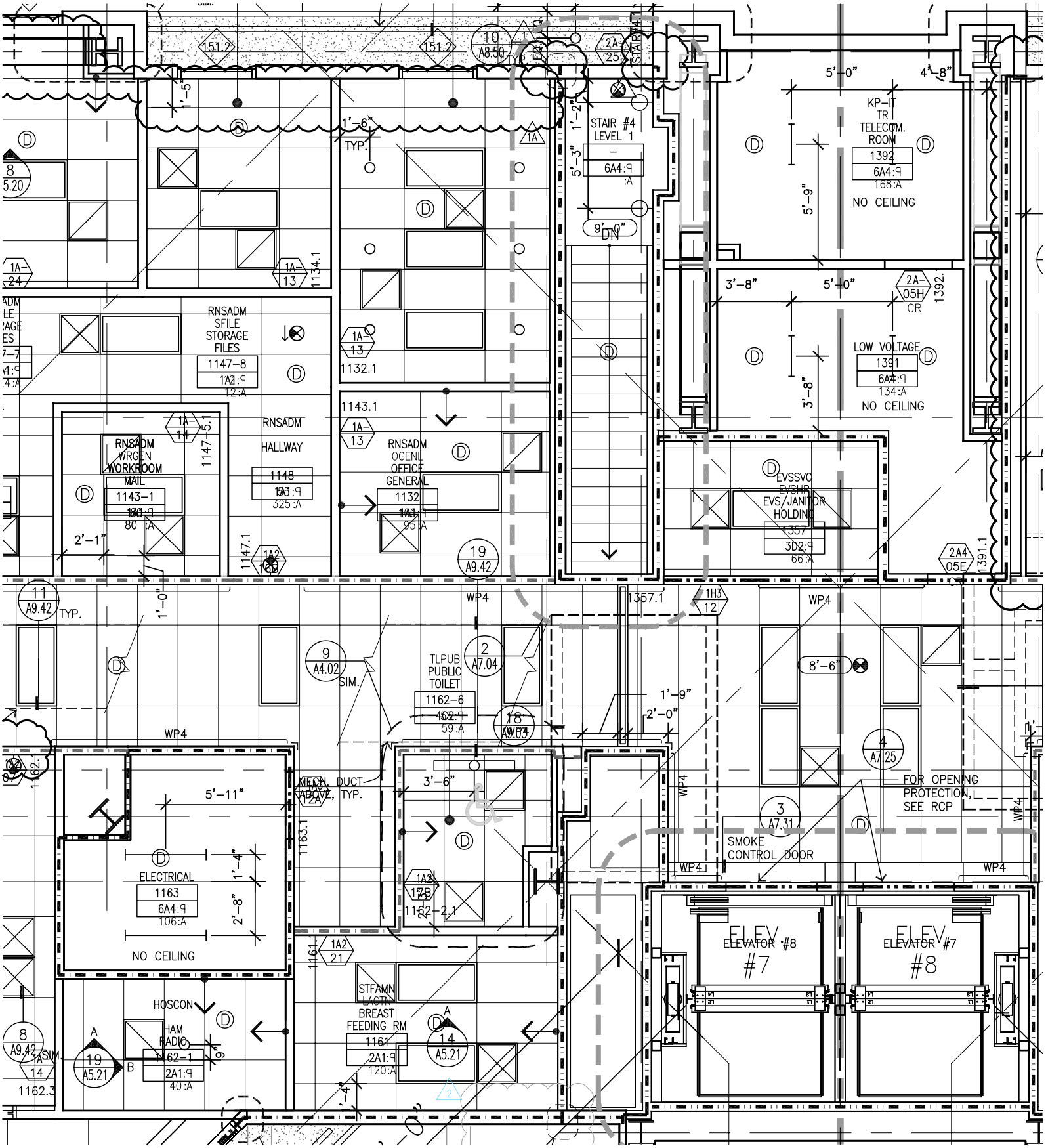
RNSADM
SFILE
STORAGE
FILES
1147-8
12:A
RNSADM
HALLWAY
1148
325:A
RNSADM
WRGEN
WORKROOM
MAIL
1143-1
80:A
RNSADM
OGENL
OFFICE
GENERAL
1132
95:A
STAIR #4
LEVEL 1
6A4:9
DN
KP-IT
TR
TELECOM.
ROOM
1392
6A4:9
168:A
NO CEILING
LOW VOLTAGE
1391
6A4:9
134:A
NO CEILING
EVSSVC
EVSHP
EVS/JANITOR
HOLDING
1357
3D2:9
66:A
TLPUB
PUBLIC
TOILET
1162-6
59:A
MECH. DUCT
ABOVE, TYP.
ELECTRICAL
1163
6A4:9
106:A
NO CEILING
HOSCON
HAM
RADIO
1162-1
2A1:9
40:A
STFAMN
LACTN
BREAST
FEEDING RM
1161
2A1:9
120:A
ELEVATOR #8
#7
ELEVATOR #7
#8
SMOKE
CONTROL DOOR
FOR OPENING
PROTECTION,
SEE RCP
WP4
TYP.
SIM.

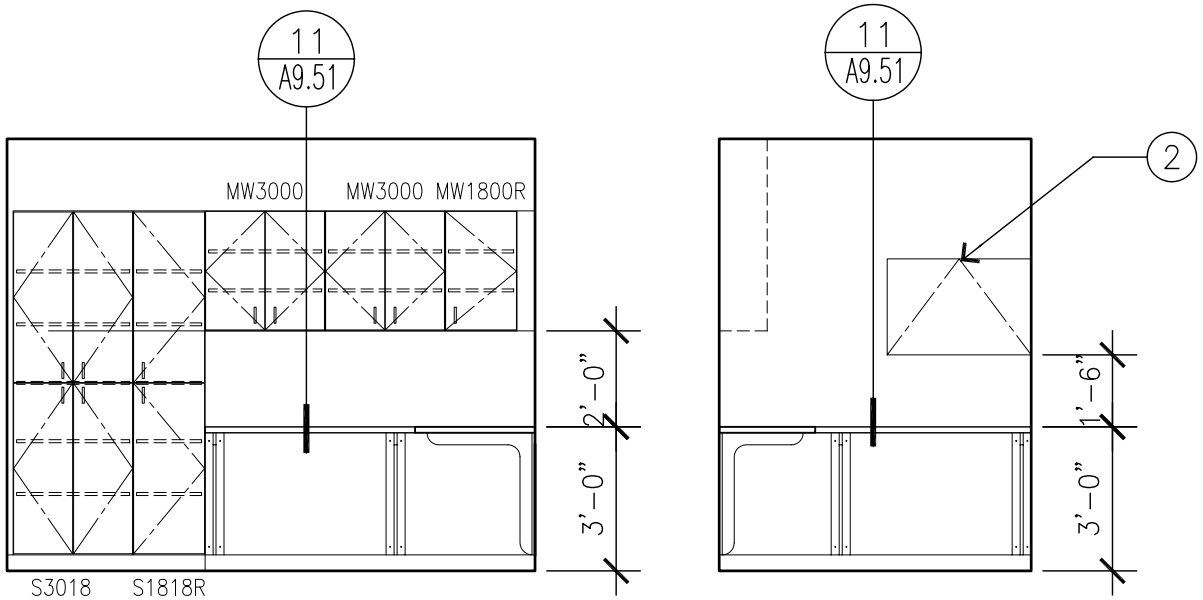

1A

19

HAM RADIO ROOM
1162-1

1/4" = 1'-0"